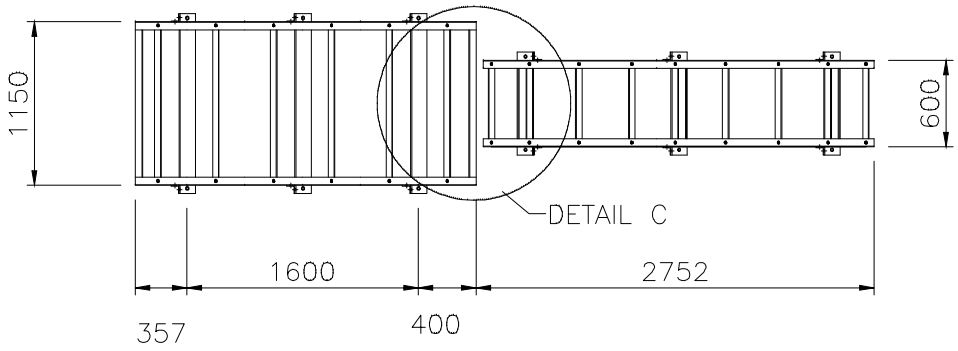

CABLE GANTRY LAYOUT PLAN FOR 76m LD TOWER

NOTE:

INVITATION REFERENCE NO:
MCMC/RDD/PDD(5)/T3_Extn(P3)/
TCA/12/14(13)

PROJECT TITLE:

TIME 3 - EXTENSION

DRAWING TITLE:

DRAWING 10:

HORIZONTAL CABLE GANTRY LAYOUT PLAN
FOR 76m LIGHT DUTY TOWER

DATE: DEC 2014

SCALE: 1 : 40

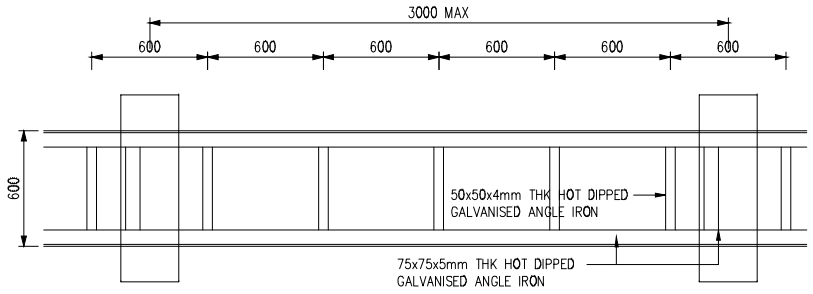

PLAN

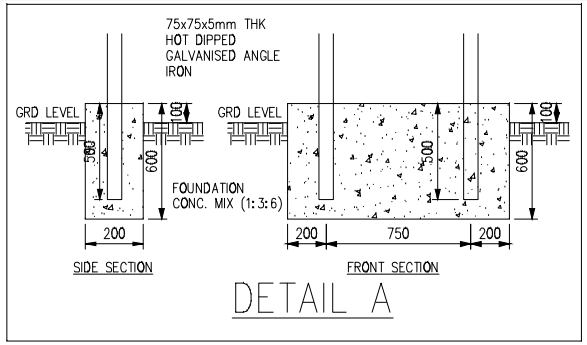

DETAIL A

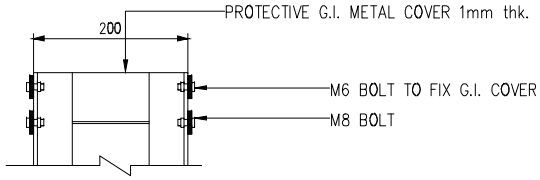

GANTRY G.I. COVER

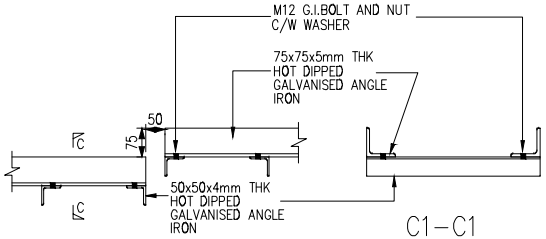

DETAIL C
N.T.S.

C1–C1
N.T.S.

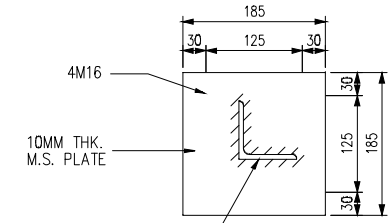

D–D
1:10

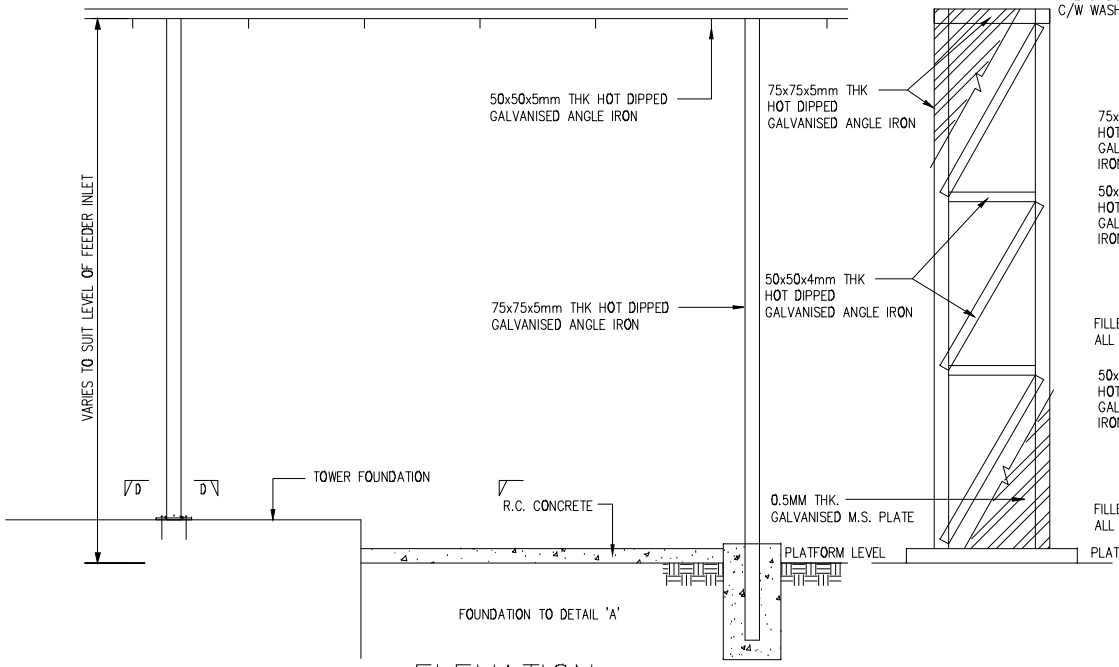

ELEVATION

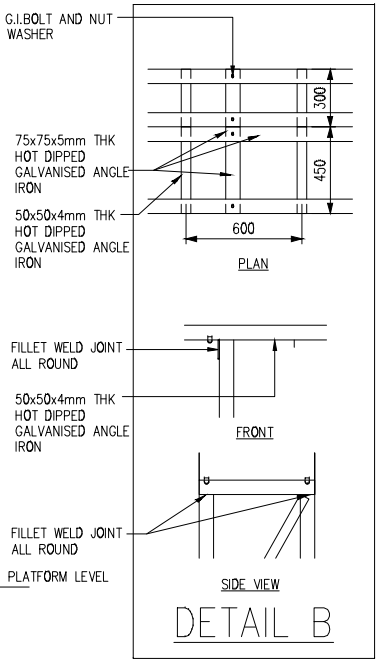

DETAIL B

NOTE:

INVITATION REFERENCE NO:
MCMC/RDD/PDD(5)/T3_Extn(P3)/
TCA/12/14(13)

PROJECT TITLE:

TIME 3 - EXTENSION

DRAWING TITLE:

DRAWING 11:

HORIONTAL CABLE GANTRY DETAILS

DEC 2014

SCALE: 1 : 30

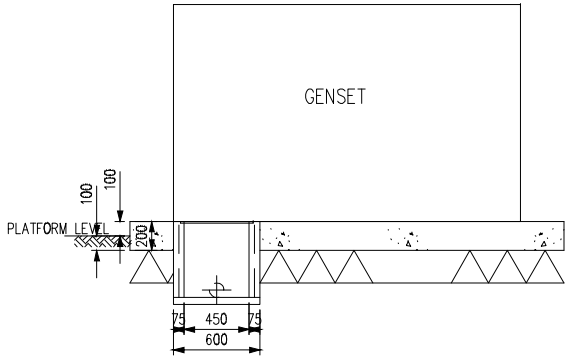

CROSS SECTION OF GENSET PLINTH

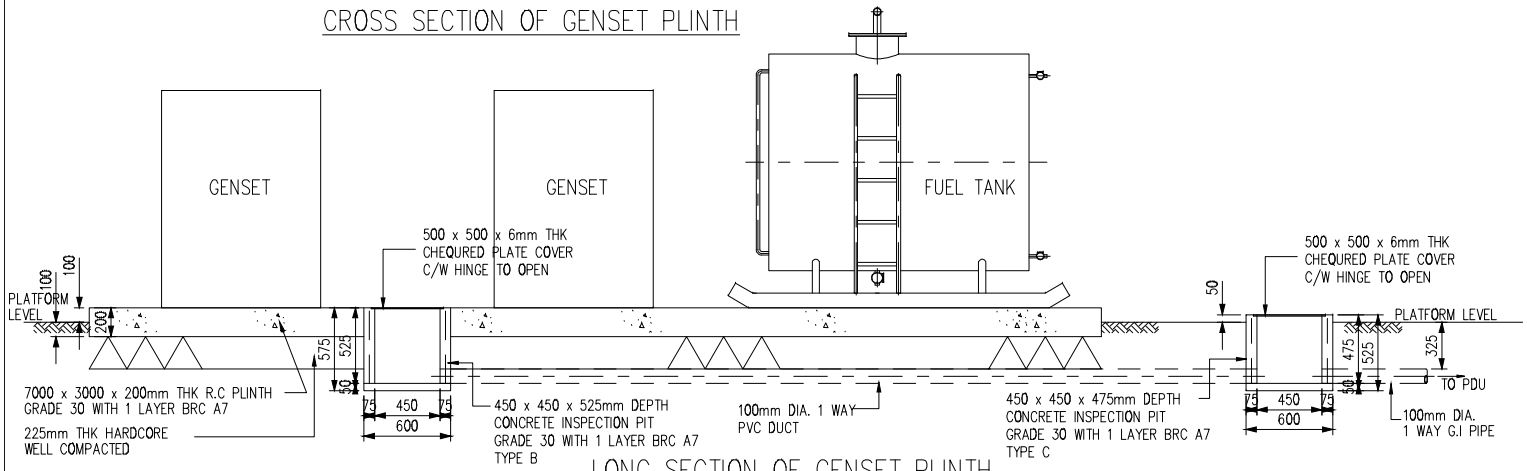

LONG SECTION OF GENSET PLINTH

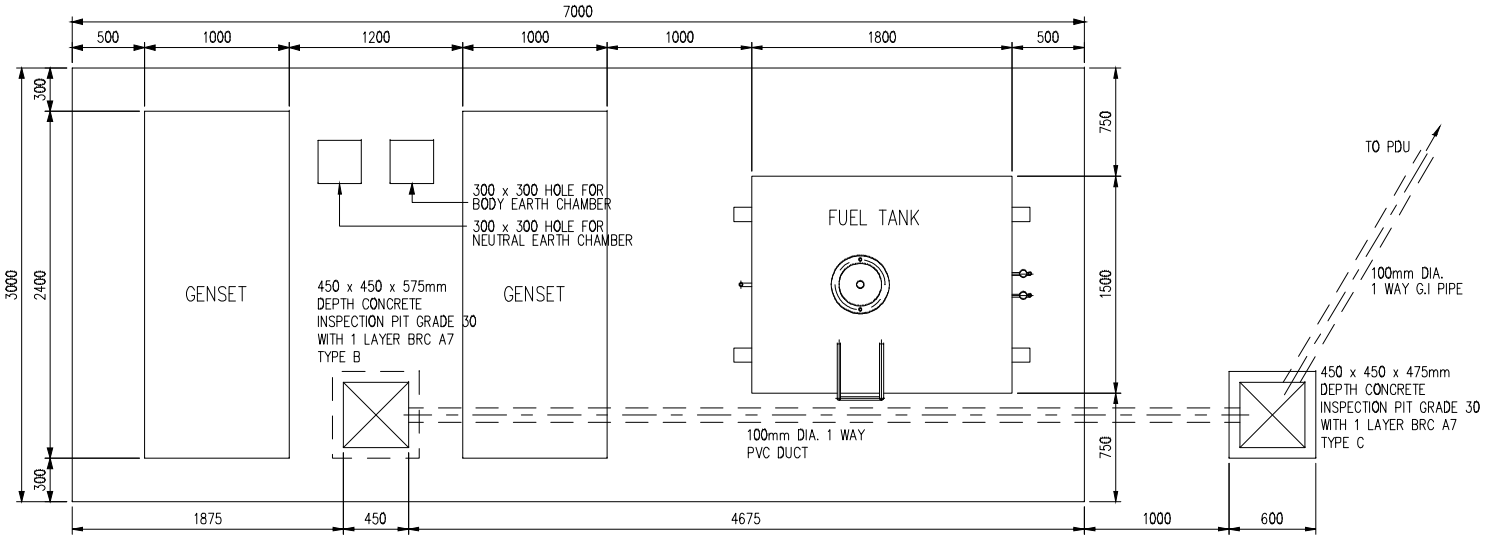

PLAN OF GENSET PLINTH

NOTE:

INVITATION REFERENCE NO:
MCMC/RDD/PDD(5)/T3_Extn(P3)/
TCA/12/14(13)

PROJECT TITLE:

TIME 3 - EXTENSION

DRAWING TITLE:

DRAWING 12:

GENSET PLINTH
PLAN, SECTION AND DETAILS

DEC 2014

SCALE: 1 : 40

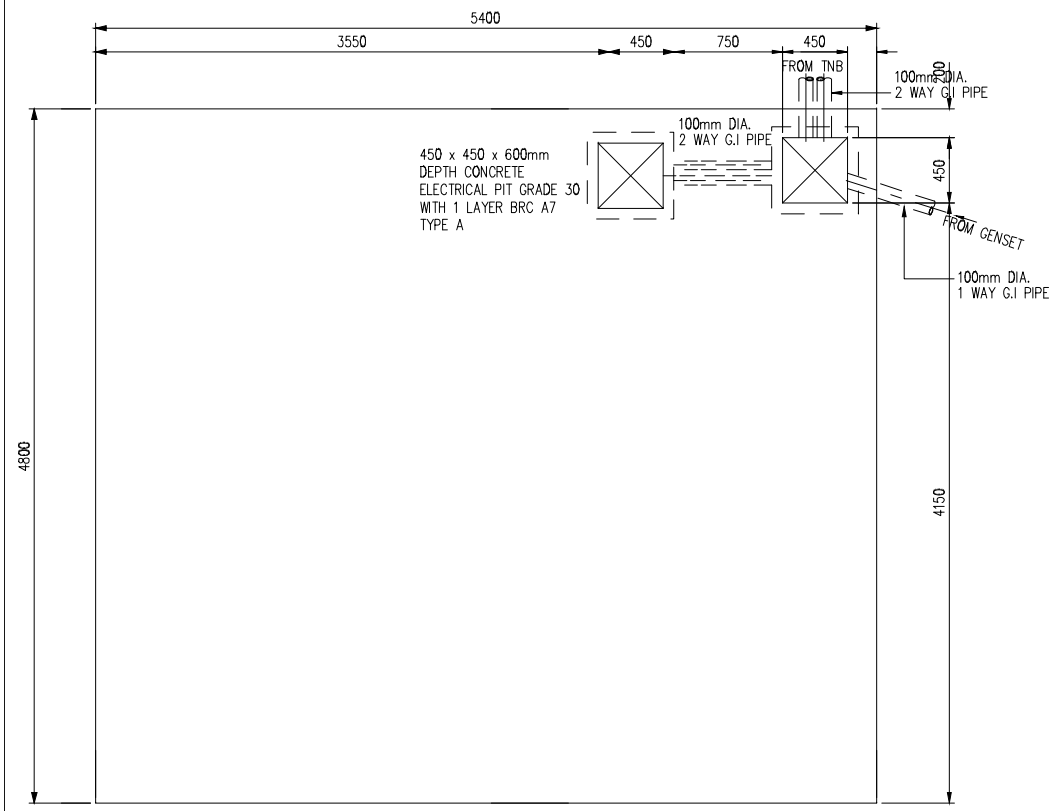

LAYOUT PLAN OF BTS PLINTH

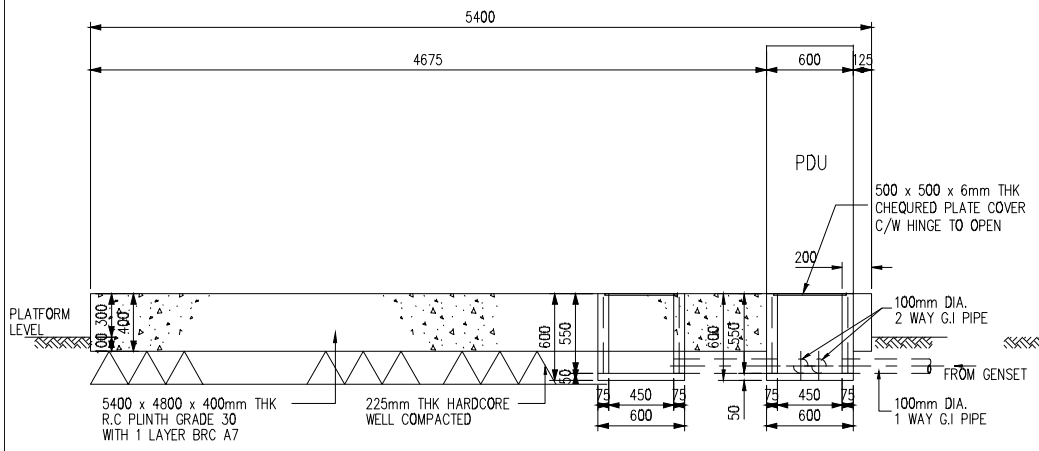

LONG SECTION OF BTS PLINTH

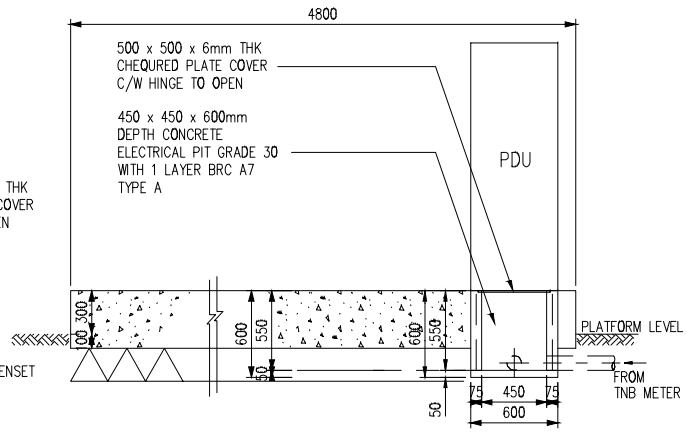

CROSS SECTION OF BTS PLINTH

NOTE:

INVITATION REFERENCE NO:
MCMC/RDD/PDD(5)/T3_Extn(P3)/
TCA/12/14(13)

PROJECT TITLE:

TIME 3 - EXTENSION

DRAWING TITLE:

DRAWING 13:

DETAILS OF BTS PLINTH FOR
SITE WITH TOWER 76m LIGHT DUTY
PLAN, SECTIONS AND DETAILS

DEC 2014

SCALE: 1 : 40

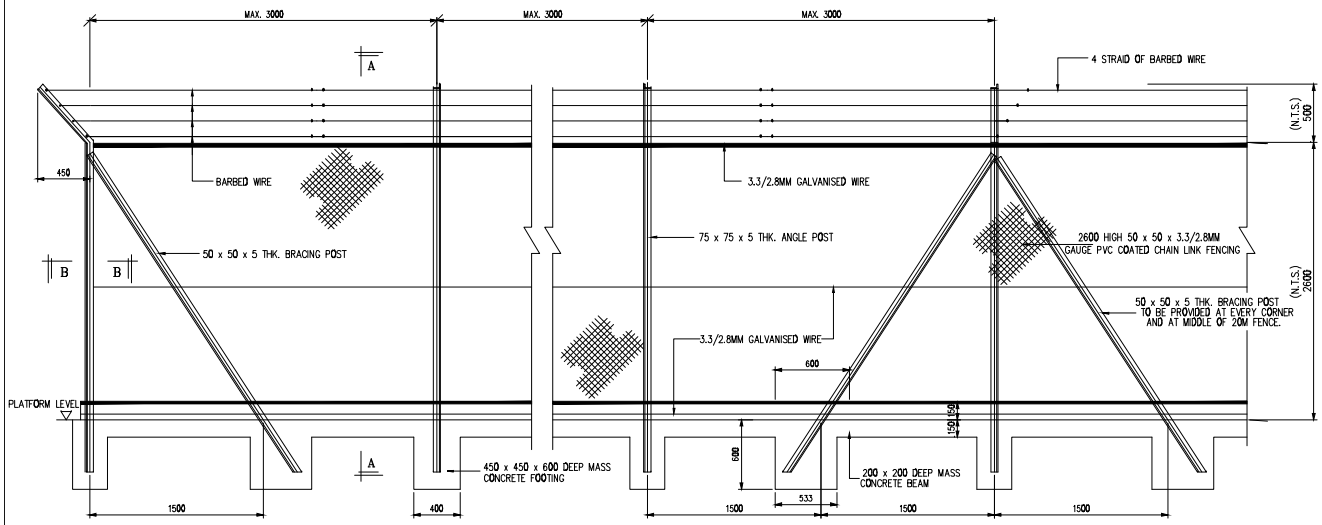

DETAILS OF CHAIN LINK FENCING

SCALE 1:50

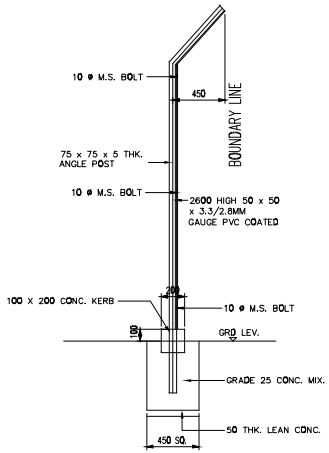

SECTION A–A

SCALE 1:40

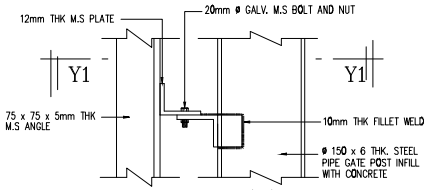

DETAIL 'Y'

SCALE 1:10

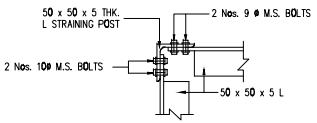

SECTION B–B

SCALE :– 1 : 10

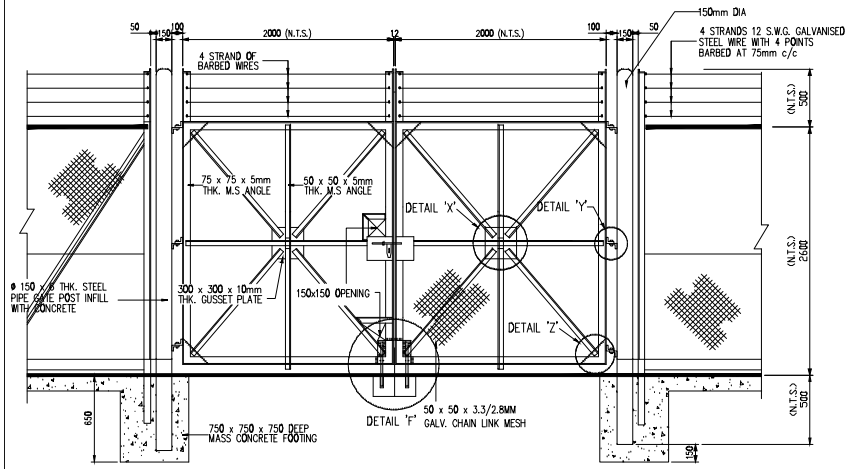

ELEVATION OF 4000mm WIDE G.M.S. GATE

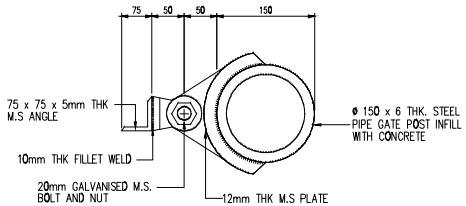

SECTION Y1–Y1

SCALE 1:5

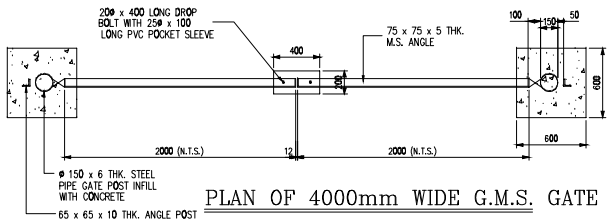

PLAN OF 4000mm WIDE G.M.S. GATE

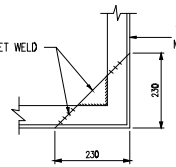

DETAIL 'Z'

SCALE 1:10

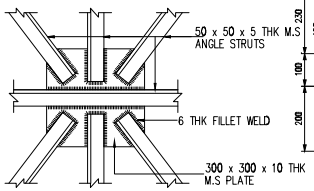

DETAIL 'X'

SCALE 1:10

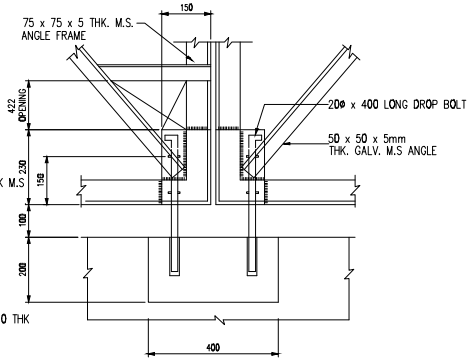

DETAIL 'F'

SCALE 1:10

NOTE:

INVITATION REFERENCE NO:
MCMC/RDD/PDD(5)/T3_Extn(P3)/
TCA/12/14(13)

PROJECT TITLE:

TIME 3 - EXTENSION

DRAWING TITLE:

DRAWING 14:

FENCING DETAILS

DATE: DEC 2014

SCALE: 1 : 50

PANEL	22	21	20	19	18	17	16	15	14	13	12	11	10	9	8	7	6	5	4	3	2	1
LEGS	V 150x150x15 H		V 150x150x12 H		V 130x130x12 H				V 130x130x9 H				V 100x100x10 H				V 90x90x7					
DIAGONALS	L 65x65x6				L 65x65x5						L 50x50x6				L 50x50x5							
HORIZONTALS	L 65x65x5				L 50x50x5		L 50x50x5		L 50x50x5		L 50x50x5		L 50x50x5			L 50x50x5						
SUBHORIZONTALS															L 50x50x5							
BOLTS FOR LEGS	10 M20				8 M20								6 M20							4 M20		
BOLTS FOR DIAGONALS	2 M16																1 M16					
BOLTS FOR HORIZONTALS	2 M16	2 M16		2 M16	2 M16		2 M16		2 M16		2 M16		2 M16			1 M16						
FACE WIDTH (m)	10.00			8.00			6.125 3.00										2.0					2.0
TOWER ELEVATION (m)	0.00	6.00	12.00	18.00	22.00	28.00	32.00	37.00	40.00	43.00	46.00	49.00	52.00	55.00	58.00	61.00	64.00	66.00	68.00	70.00	72.00	74.00	76.00

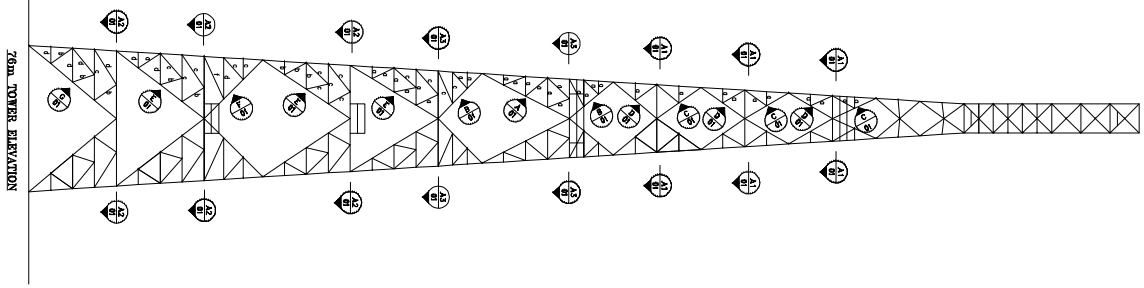

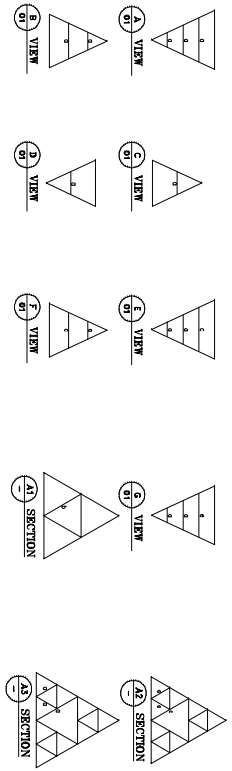

NOTES:-
1. I-M16 BOLT FOR REDUNDANTS.
2. LEGS:

	REDUNDANT MATERIAL
a	L 50x50x5
b	L 50x50x6
c	L 65x65x5
d	L 65x65x6
e	L 70x70x6
f	L 75x75x6

NOTE:

INVITATION REFERENCE NO:
MCMC/RDD/PDD(5)/T3_Extn(P3)/
TCA/12/14(13)

PROJECT TITLE:

TIME 3 - EXTENSION

DRAWING TITLE:

DRAWING 15:

GREENFIELD SITE 76m
LD TOWER

DATE: DEC 2014

SCALE: 1 : 125

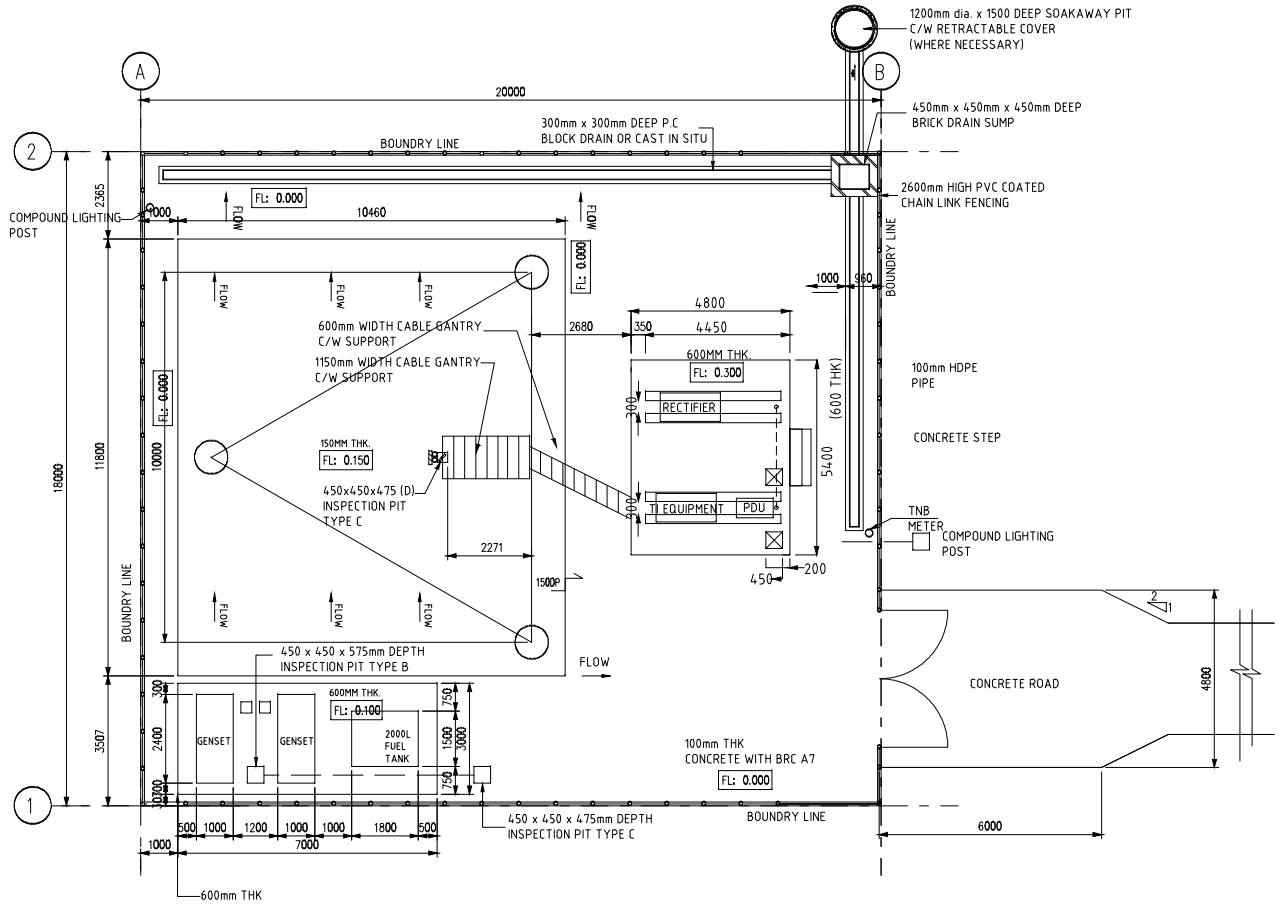

COMPOUND LAYOUT PLAN (20m x 18m)

0 5000 10000

NOTE: ALL CONCRETE SURFACES TO BE STEEL TROWELLED SMOOTH FINISH TO PRODUCE A UNIFORM SURFACE FREE FROM SCREED MARKS.

NOTE:

INVITATION REFERENCE NO:
MCMC/RDD/PDD(5)/T3_Extn(P3)/
TCA/12/14(13)

PROJECT TITLE:

TIME 3 - EXTENSION

DRAWING TITLE:

DRAWING 1:

COMPOUND LAYOUT PLAN
LIGHT DUTY TOWER (76M)

DATE: DEC 2014

SCALE: 1 : 100

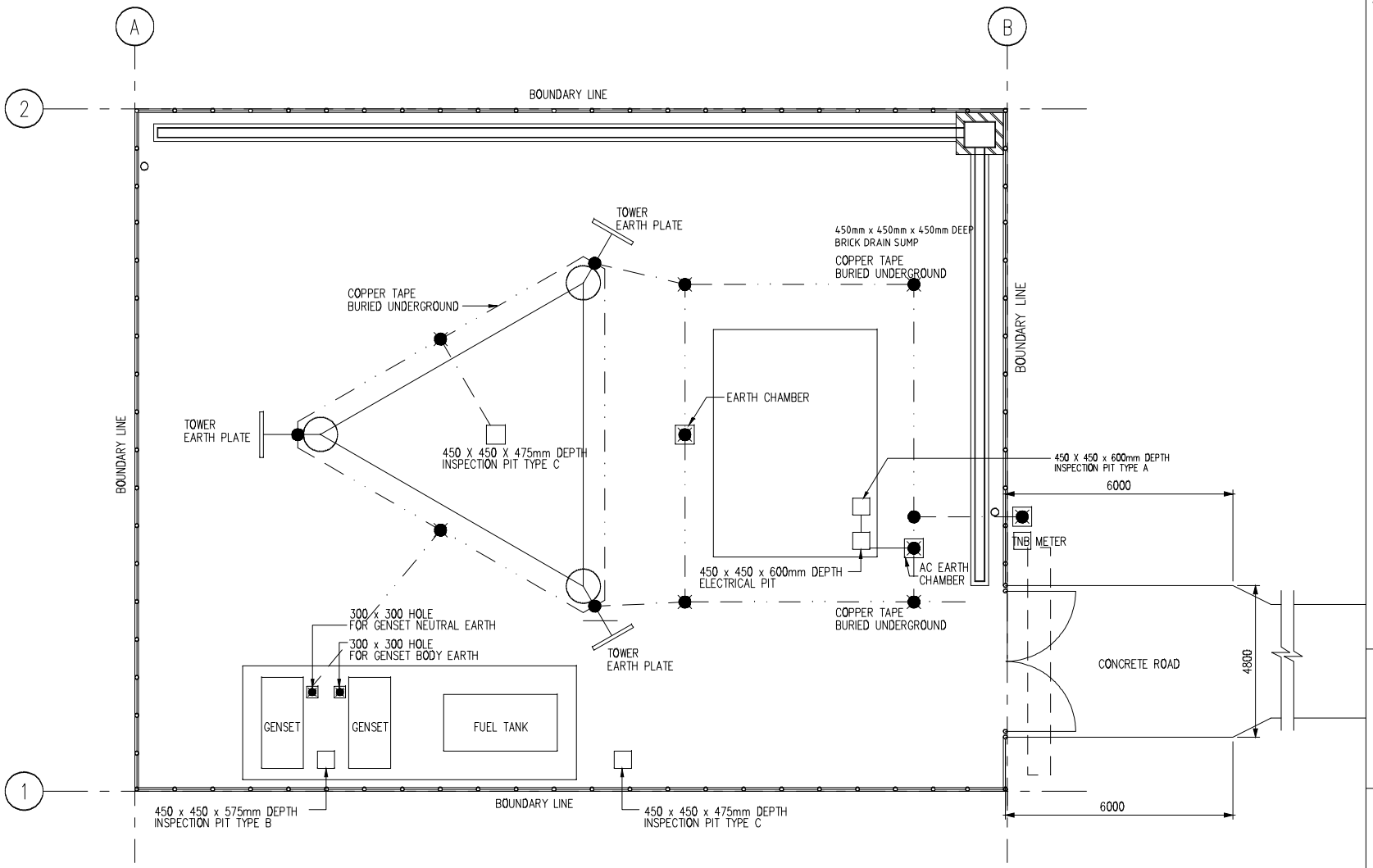

COMPOUND LAYOUT PLAN

0 5000 10000

NOTE: ALL CONCRETE SURFACES TO BE STEEL TROWELLED SMOOTH FINISH TO PRODUCE A UNIFORM SURFACE FREE FROM SCREED MARKS.

NOTE:

LEGEND

- 25 x 3mm THK COPPER TAPE BURIED UNDERGROUND
- CAD WELD JOIN
- 25 x 3mm THK COPPER TAPE BURIED UNDERGROUND WITH 2 NOS COPPER ROD
- EARTH CHAMBER WITH 2 NOS COPPER ROD TO BE REFER TO DETAIL A AND DETAIL C

INVITATION REFERENCE NO:
MCMC/RDD/PDD(5)/T3_Extn(P3)/
TCA/12/14(13)

PROJECT TITLE:

TIME 3 - EXTENSION

DRAWING TITLE:

DRAWING 2:

GENERAL EARTHING LAYOUT PLAN

DATE: DEC 2014

SCALE: 1 : 125

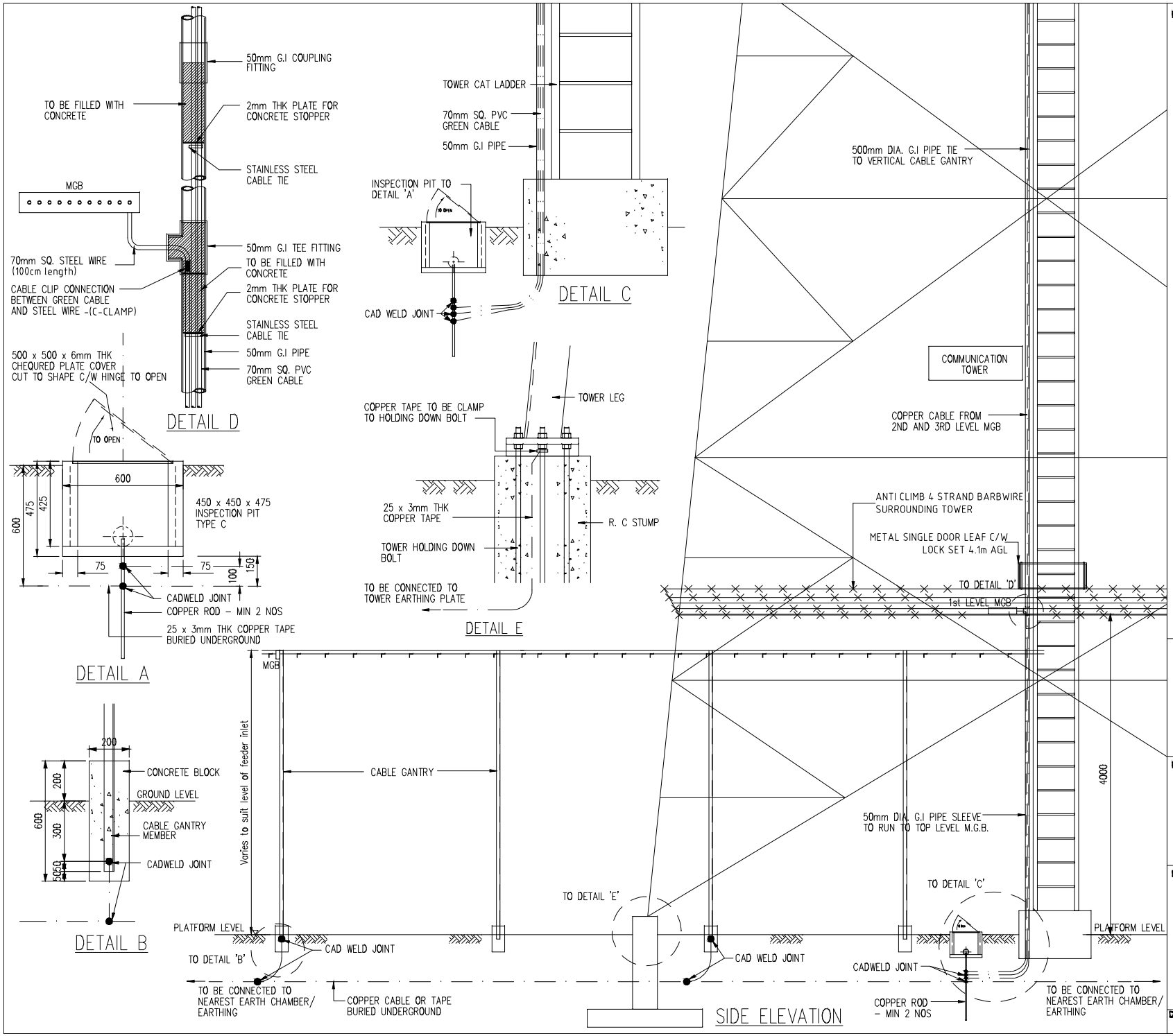

NOTE:

NOTES:

1. AIR TERMINAL SHALL COVERED 45 DEGREE OF THE AREA FROM TOP OF TERMINAL
2. IN ORDER TO REDUCE EARTHING RESISTANCE READING BELOW 5 Ohm, UTILISATION OF COMPOUND AS A MEDIUM IS ACCEPTABLE.

INVITATION REFERENCE NO:
MCMC/RDD/PDD(5)/T3_Extn(P3)/
TCA/12/14(13)

PROJECT TITLE:

TIME 3 - EXTENSION

DRAWING TITLE:

DRAWING 3:

PLAN AND SECTIONS DETAILS OF EARTHING SYSTEM

DATE: DEC 2014

SCALE: 1 : 50

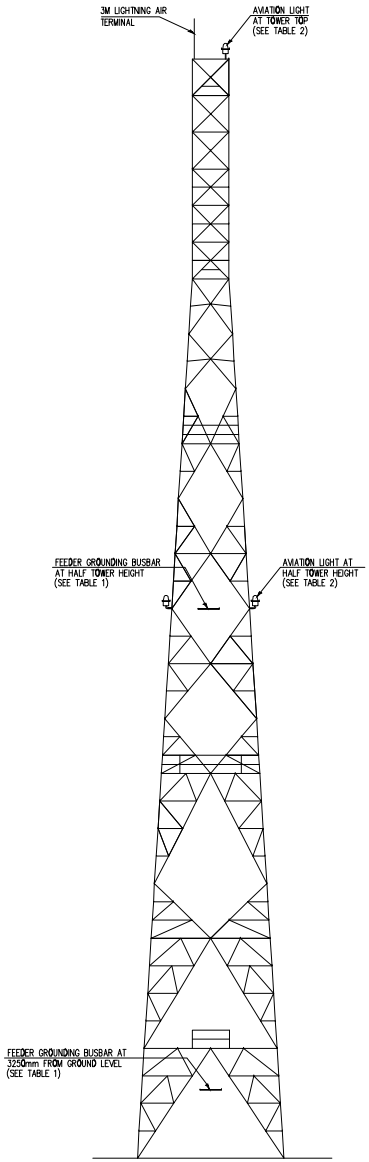

TYPICAL TOWER ELEVATION

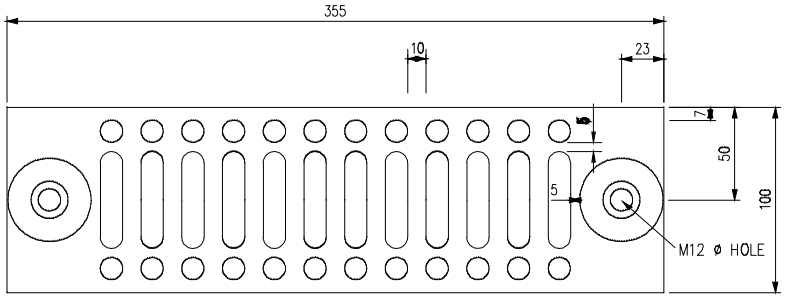

FRONT VIEW

GROUNDING BUSBAR

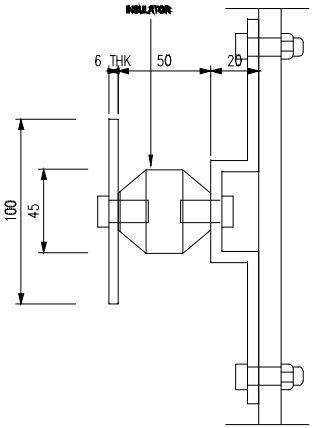

ELEVATION

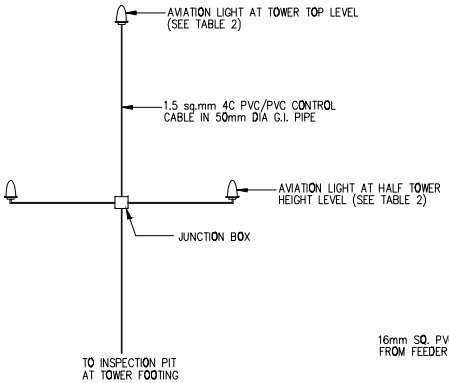

AVIATION LIGHT SCHEMATIC

TABLE 2 : LOCATION OF AVIATION LIGHT

TOWER HEIGHT	AT TOWER TOP (1 NUMBER)	AT HALF TOWER HEIGHT (2 NUMBERS)
76m	76m	38m

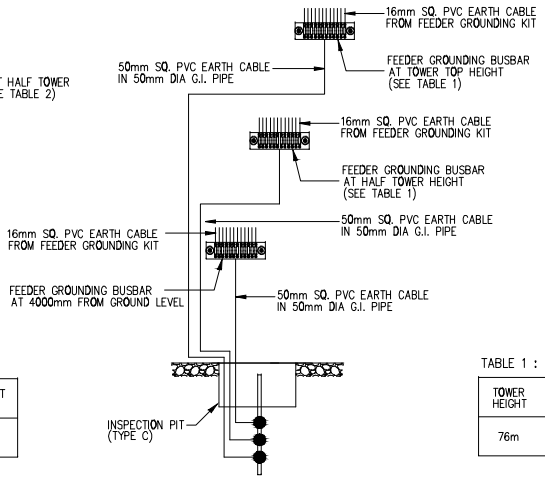

FEEDER GROUNDING BUSBAR SCHEMATIC

TABLE 1 : LOCATION OF MAIN GROUNDING BUSBAR

TOWER HEIGHT	AT BOTTOM OF TOWER	AT HALF TOWER HEIGHT	AT TOWER TOP HEIGHT
76m	4m	38m	70m

NOTE:

NOTES:

1. AIR TERMINAL SHALL COVERED 45 DEGREE OF THE AREA FROM TOP OF TERMINAL
2. IN ORDER TO REDUCE EARTHING RESISTANCE READING BELOW 5 Ohm, UTILISATION OF COMPOUND AS A MEDIUM IS ACCEPTABLE.

INVITATION REFERENCE NO:
MCMC/RDD/PDD(5)/T3_Extn(P3)/
TCA/12/14(13)

PROJECT TITLE:

TIME 3 - EXTENSION

DRAWING TITLE:

DRAWING 4:

PLAN AND SECTIONS DETAILS OF EARTHING SYSTEM

DATE: DEC 2014

SCALE: 1 : 50

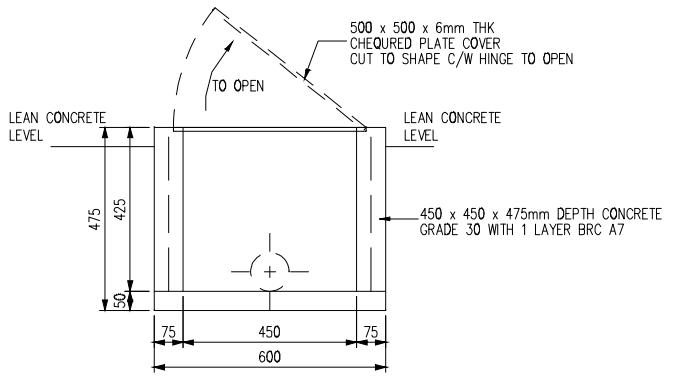

SECTION E–E

INSPECTION PIT C

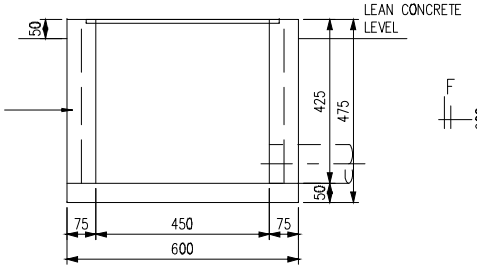

SECTION F–F

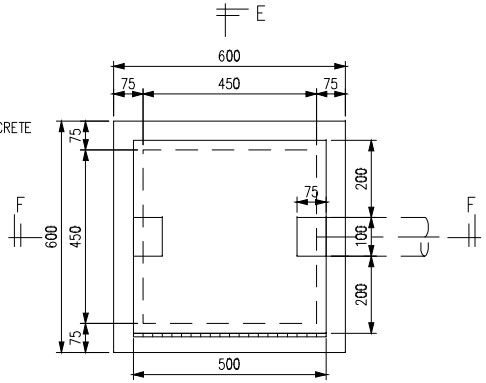

PLAN

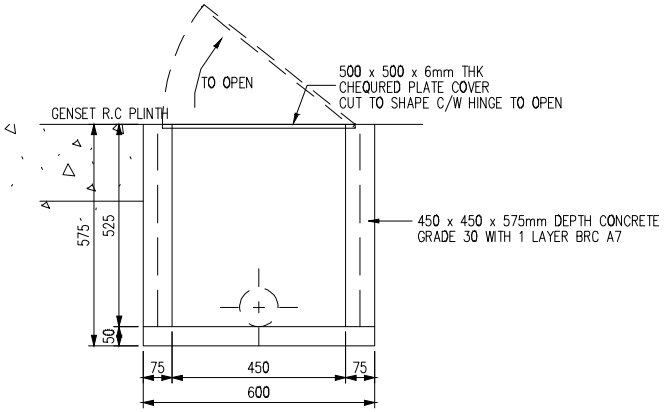

SECTION C–C

INSPECTION PIT B

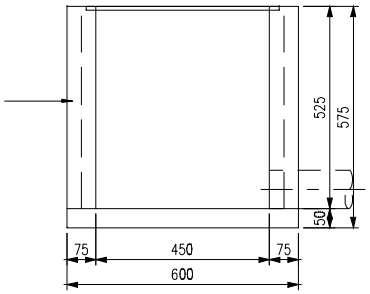

SECTION D–D

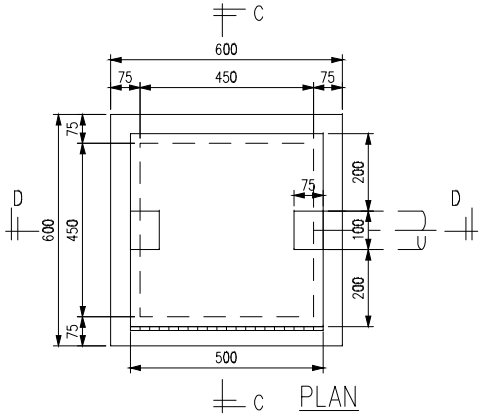

PLAN

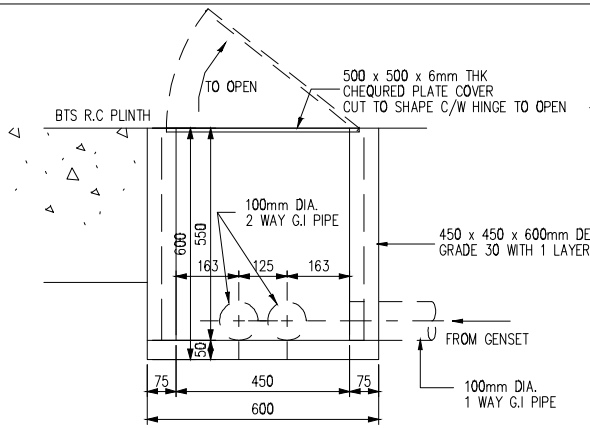

SECTION A–A

INSPECTION PIT A

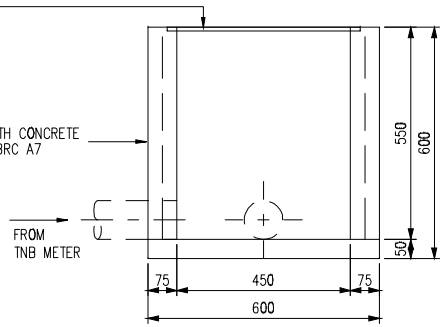

SECTION B–B

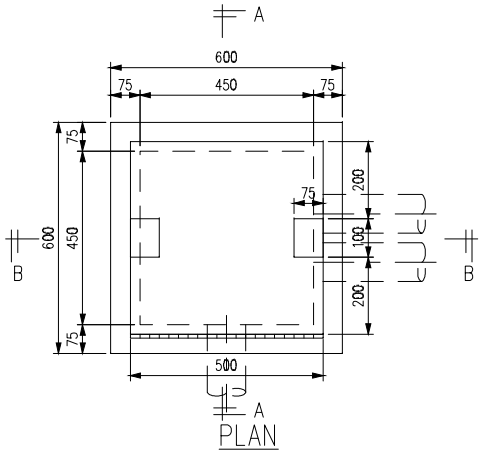

PLAN

NOTE:

INVITATION REFERENCE NO:
MCMC/RDD/PDD(5)/T3_Extn(P3)/
TCA/12/14(13)

PROJECT TITLE:

TIME 3 - EXTENSION

DRAWING TITLE:

DRAWING 5:

INSPECTION PIT A,B AND C
PLAN, SECTION AND DETAILS

DATE: DEC 2014

SCALE: 1 : 15

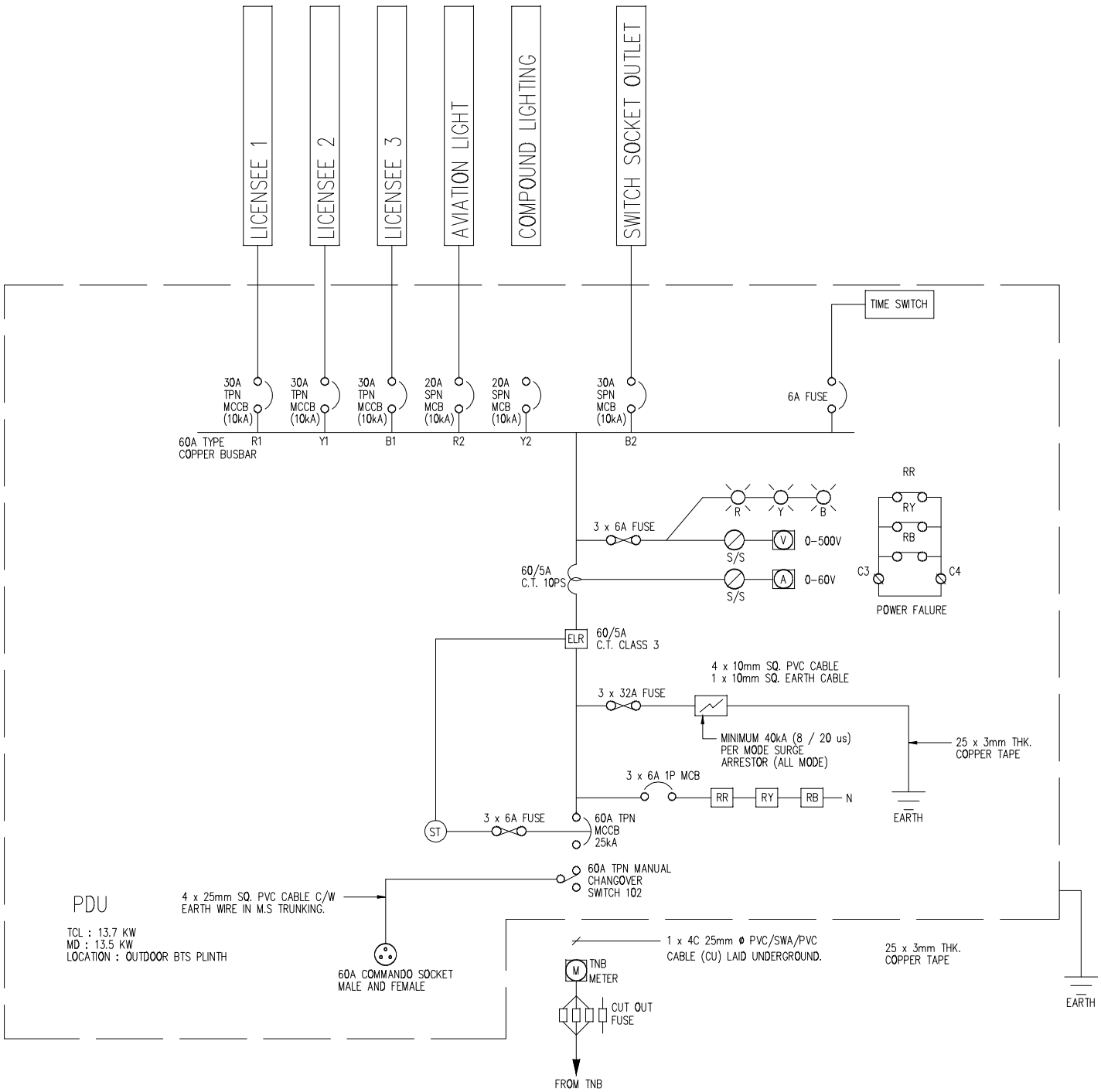

NOTE:

Moulded Case Circuit Breaker	MG / Hitachi/Ha ı
Minature Circuit Breaker	MG / Hager
Earth Leakage Relay	Hager / Kasuga
Surge Arrester	Novaris SD3-40N/3X
AC & DC Relay	Omroh / Relpo

INVITATION REFERENCE NO:
MCMC/RDD/PDD(5)/T3_Extn(P3)/
TCA/12/14(13)

PROJECT TITLE:

TIME 3 - EXTENSION

DRAWING TITLE:

DRAWING 6:

PDU ELECTRICAL SINGLE LINE DIAGRAM [60 AMPS]

DATE: DEC 2014

SCALE: N.T.S

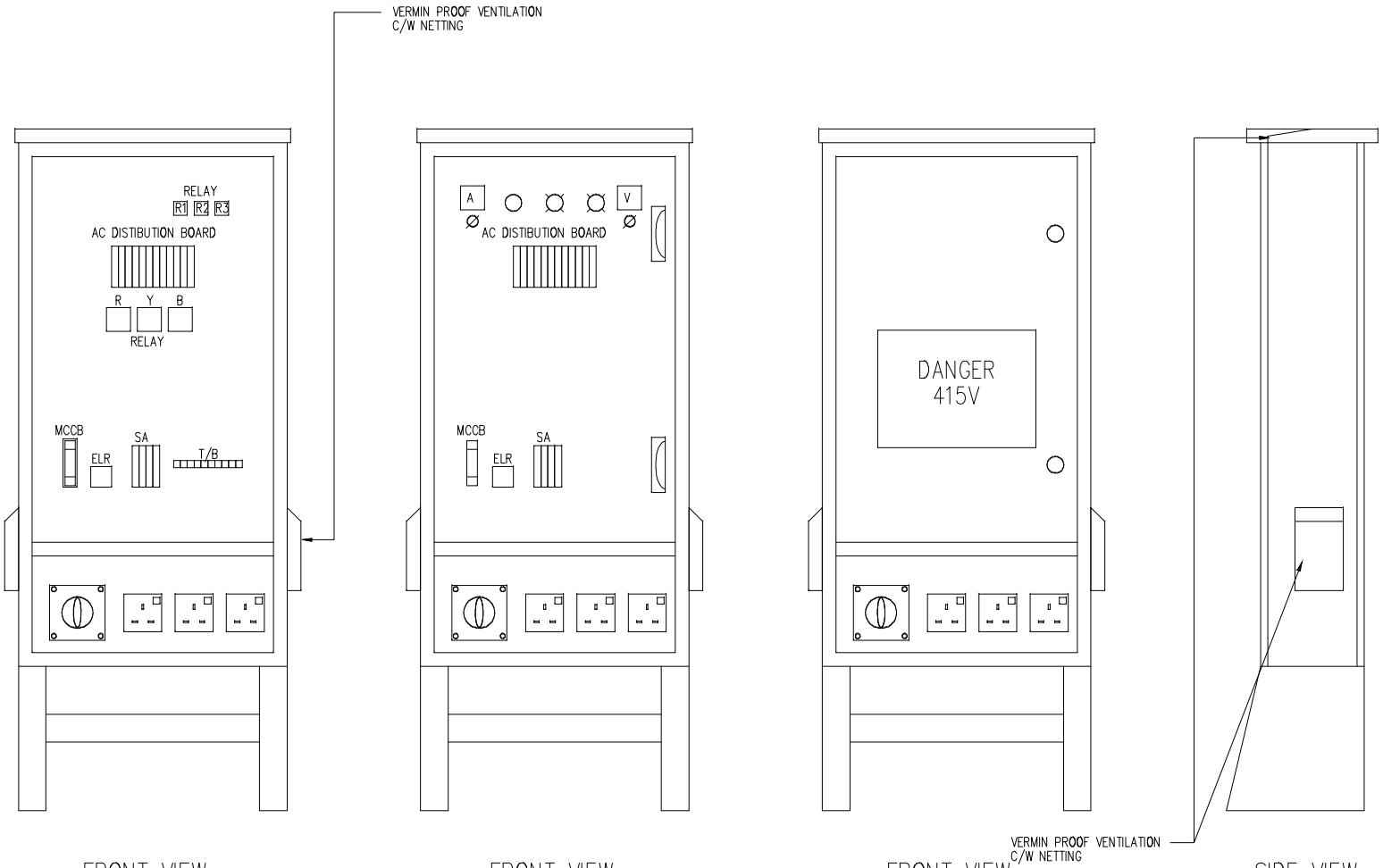

FRONT VIEW

EXTERNAL AND INTERNAL
DOOR PANEL REMOVED

FRONT VIEW

EXTERNAL
DOOR PANEL REMOVED

FRONT VIEW

SIDE VIEW

NOTE:

INVITATION REFERENCE NO:
MCMC/RDD/PDD(5)/T3_Extn(P3)/
TCA/12/14(13)

PROJECT TITLE:

TIME 3 - EXTENSION

DRAWING TITLE:

DRAWING 7:

PDU WEATHER PROOF [OUTDOOR TYPE]
POWER DISTRIBUTION UNIT
TO MANUFACTURE'S DETAILS

DATE:	SCALE:
DEC 2014	N.T.S

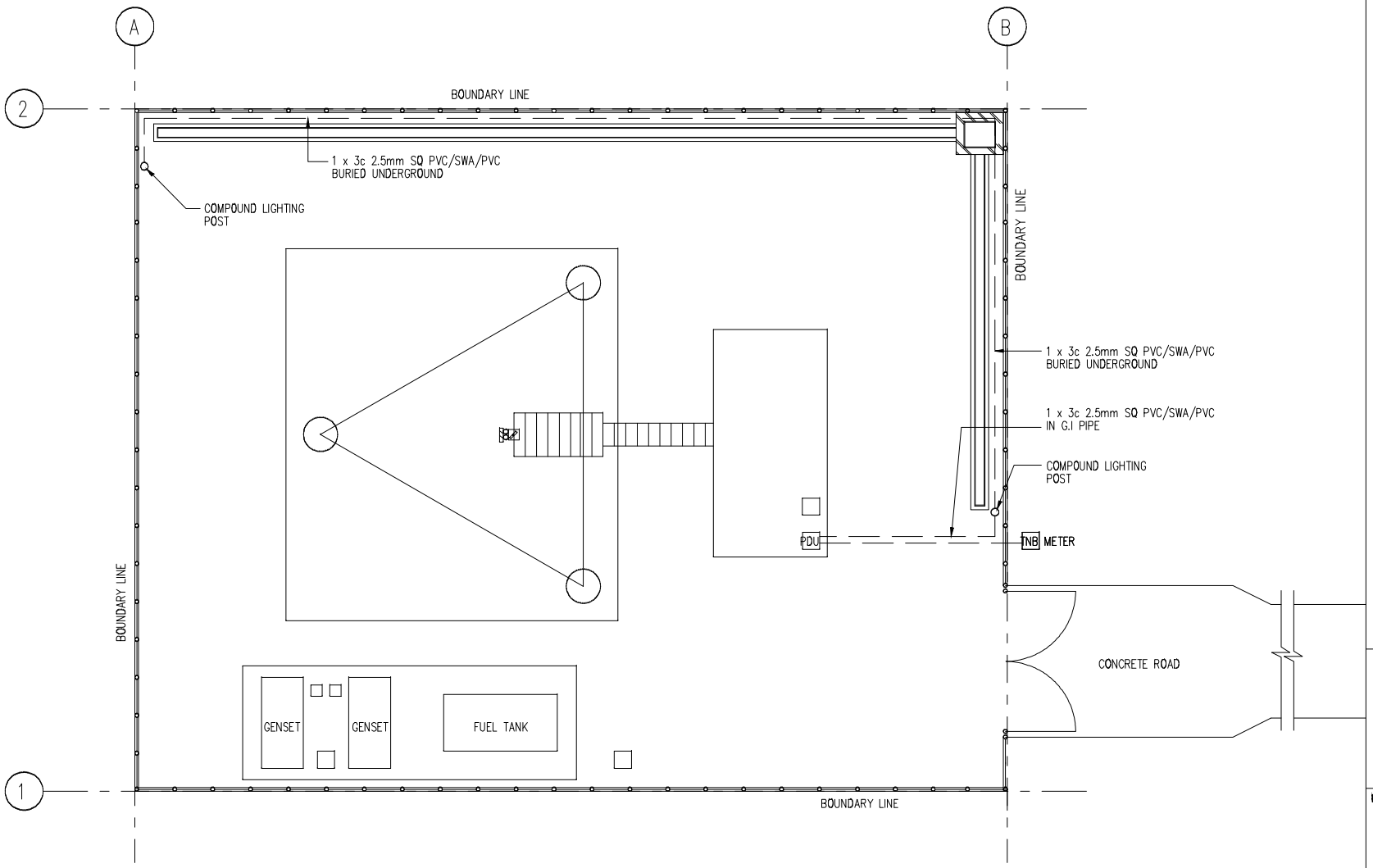

COMPOUND LAYOUT PLAN

0 5000 10000

NOTE: ALL CONCRETE SURFACES TO BE STEEL TROWELLED SMOOTH FINISHED TO PRODUCE A UNIFORM SURFACE FREE FROM SCREED MARKS.

NOTE:

INVITATION REFERENCE NO:
MCMC/RDD/PDD(5)/T3_Extn(P3)/
TCA/12/14(13)

PROJECT TITLE:

TIME 3 - EXTENSION

DRAWING TITLE:

DRAWING 8:

COMPOUND LIGHTING

DATE: DEC 2014

SCALE: 1 : 125

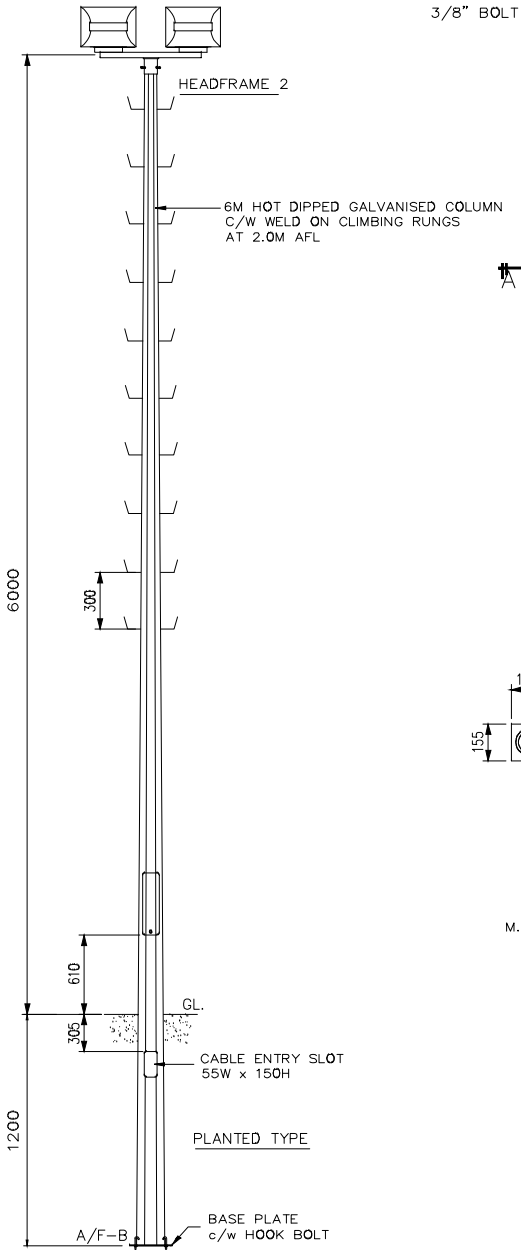

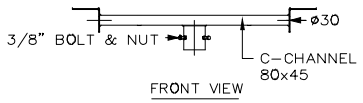

FRONT VIEW

HEADFRAME 2 DETAIL

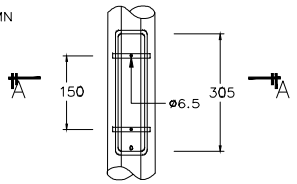

SERVICE DOOR DETAIL

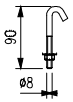

HOOK BOLT

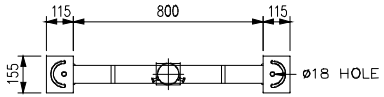

PLAN VIEW

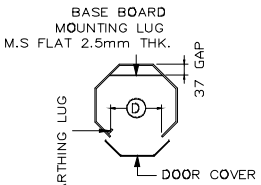

SECTION A-A

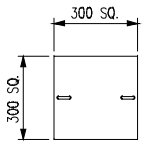

BASE PLATE

TECHNICAL SPECIFICATIONS

1. THE DESIGN OF LIGHTING COLUMNS ARE DYNAMICALLY APPROVED AND VERIFIED BY USING (FINITE ELEMENT ANALYSIS), DESIGNED TO WITHSTAND WIND SPEED OF 35M PER SECOND, TOPOGRAPHY, GROUND ROUGHNESS AND STATISTICAL FACTOR OF 1.0.

2. LIGHTING COLUMNS COMPLY TO THE BRITISH LIGHTING COLUMNS SPECIFICATION BS 5649.

3. MATERIALS USED FOR LIGHTING COLUMNS ARE COMPLIANCE TO BS 4360 GRADE 50A, BS 4360 GRADE 43A AND BS 1387 RESPECTIVELY.

4. LONGITUDE OF LIGHTING COLUMNS ARE SEAM WELDED CONFORM TO BS 5135 BY AUTOMATIC CONTINUOUS METAL INERT GAS (MIG) PROCESS.

5. LIGHTING COLUMNS ARE ANTI-CORRODED BY HOT-DIP GALVANIZED, COMPLIANCE TO GALVANIZING STANDARD ISO 1461 : 1999.

6. SERVICE DOOR DIMENSION ARE GIVEN AS A GUIDE ONLY. THE CONTRACTOR MUST SATISFY HIMSELF THAT DIMENSION GIVEN IS ADEQUATE FOR THE INSTALLATION OF THE REQUIRED CONTROL GEARS.

7. THE SHAFT OF 6M HEIGHT LIGHTING COLUMNS SHALL BE IN SINGLE SECTION WHEREAS THE SHAFT OF 8M TO 12M HEIGHT LIGHTING COLUMNS SHALL BE IN 2 SECTIONS.

NOTE:

INVITATION REFERENCE NO:
MCMC/RDD/PDD(5)/T3_Extn(P3)/
TCA/12/14(13)

PROJECT TITLE:

TIME 3 - EXTENSION

DRAWING TITLE:

DRAWING 9:

COMPOUND LIGHTING COLUMN

DATE: DEC 2014

SCALE: 1 : 125